distributed by BY versa GROUP

Stelrad®

M33900900

TOP VIEW

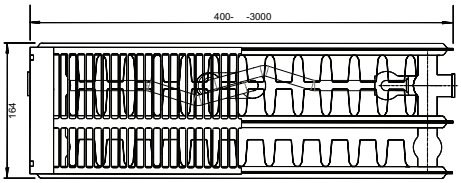

J HANGER VIEW

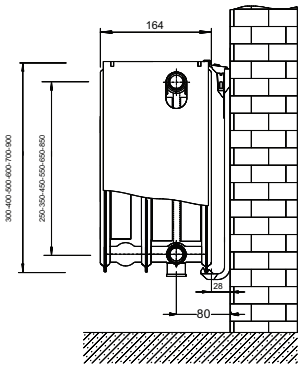

Connection Right Side
Distance 80mm

Connection left Side
Distance 140mm

LEFT VIEW

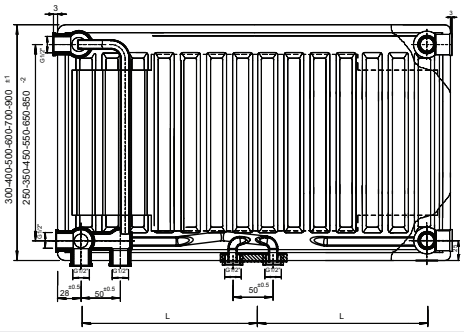

RIGHT VIEW

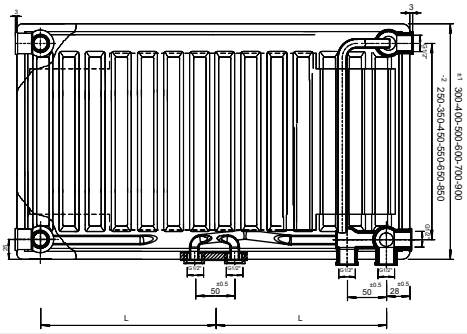

LEFT TOP VIEW

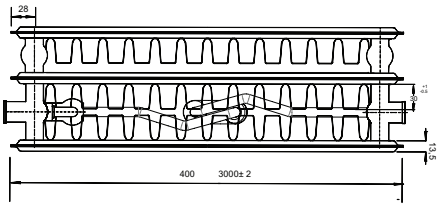

RIGHT TOP VIEW

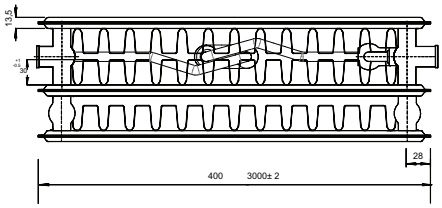

LEFT BOTTOM VIEW

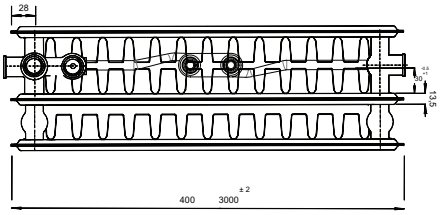

RIGHT BOTTOM VIEW

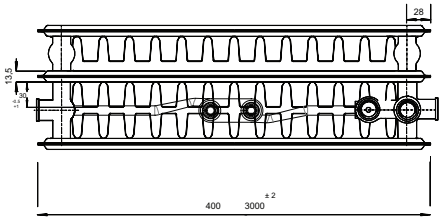

Onder voorbehoud van wijzigingen en drukfouten
Sous réserve de modifications et d'erreurs d'impression
Subject to changes and printing errors